PFISTER

Contempra™

Tub And Shower Trim

LG89-7NCBG Finish*(BG)* ❑ LG89-8NCBG Finish*(BG)* ❑
LG89-7NCB Finish*(B)* ❑ LG89-8NCB Finish*(B)* ❑
R89-1NCBG Finish*(BG)* ❑ R89-1NCC Finish*(C)* ❑ LG89-7NCC Finish*(C)* ❑ LG89-8NCC Finish*(C)* ❑
R89-1NCB Finish*(B)* ❑ R89-1NCK Finish*(K)* ❑ LG89-7NCK Finish*(K)* ❑ LG89-8NCK Finish*(K)* ❑

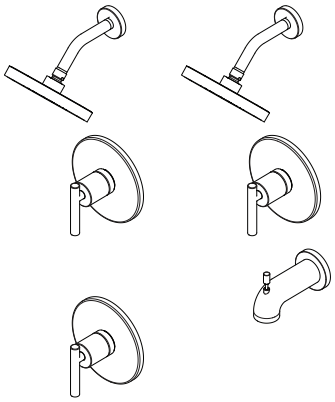

Specifications

- Trim Only, Valve Not Included

Features

- 1.8 GPM Showerhead
- Brass Ball Joint
- SecurePfit™ Trim
- PVD Finish (K Finish Only)
- Raincan Showerhead
- Temperature Control Only
- Tub & Shower Trim (8NC)
- Shower Only Trim (7NC)
- Flange Only (1NC)
- Fits 0X8 Valve or JX8 Valves Only
- Pforever Warranty®

Code Compliance

Pfister products are designed and manufactured in compliance with the following standards and codes:

- IAPMO Certified
- CSA B125 Certified
- ASME A112.18.1
- Cal Green Compliant
- CEC Compliant
- EPA WaterSense Certification 1.8 gpm, 6.8 L/Min
- ADA Compliant-ANSI A117.1 (Lever handles only)

Dimensions

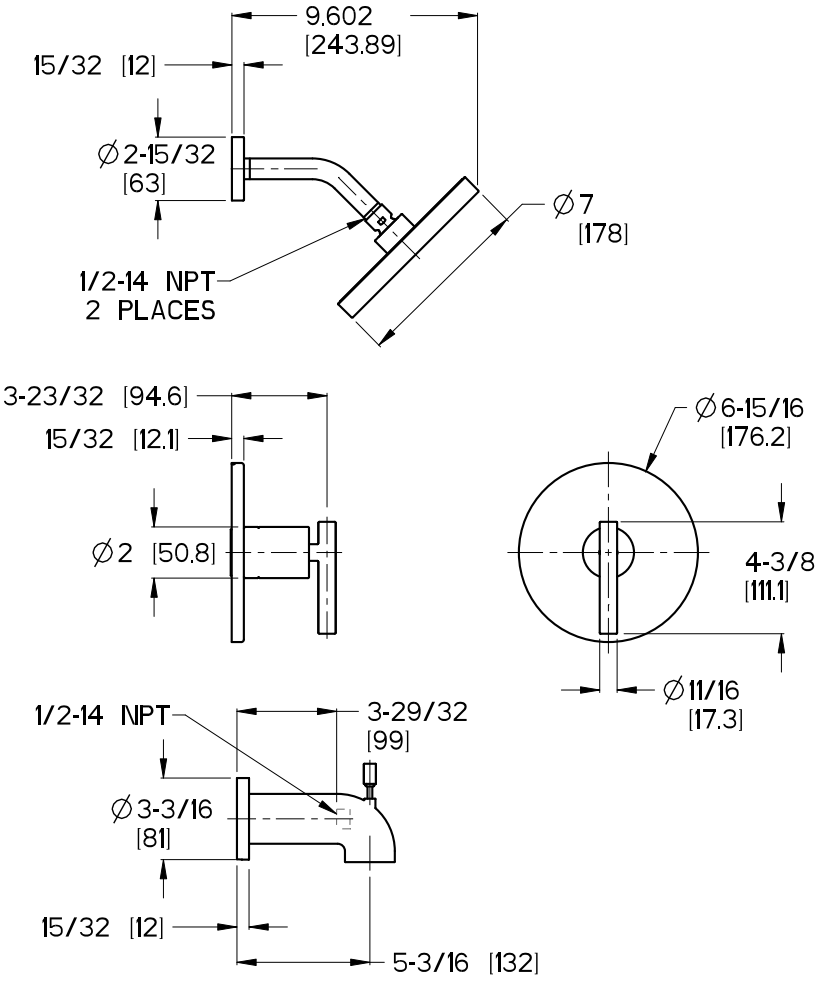

1-800-PFAUCET (732-8238) • pfisterfaucets.com/support

Copyright © 2019, Pfister Inc.