NOTES:

SPECIFICATION DWG

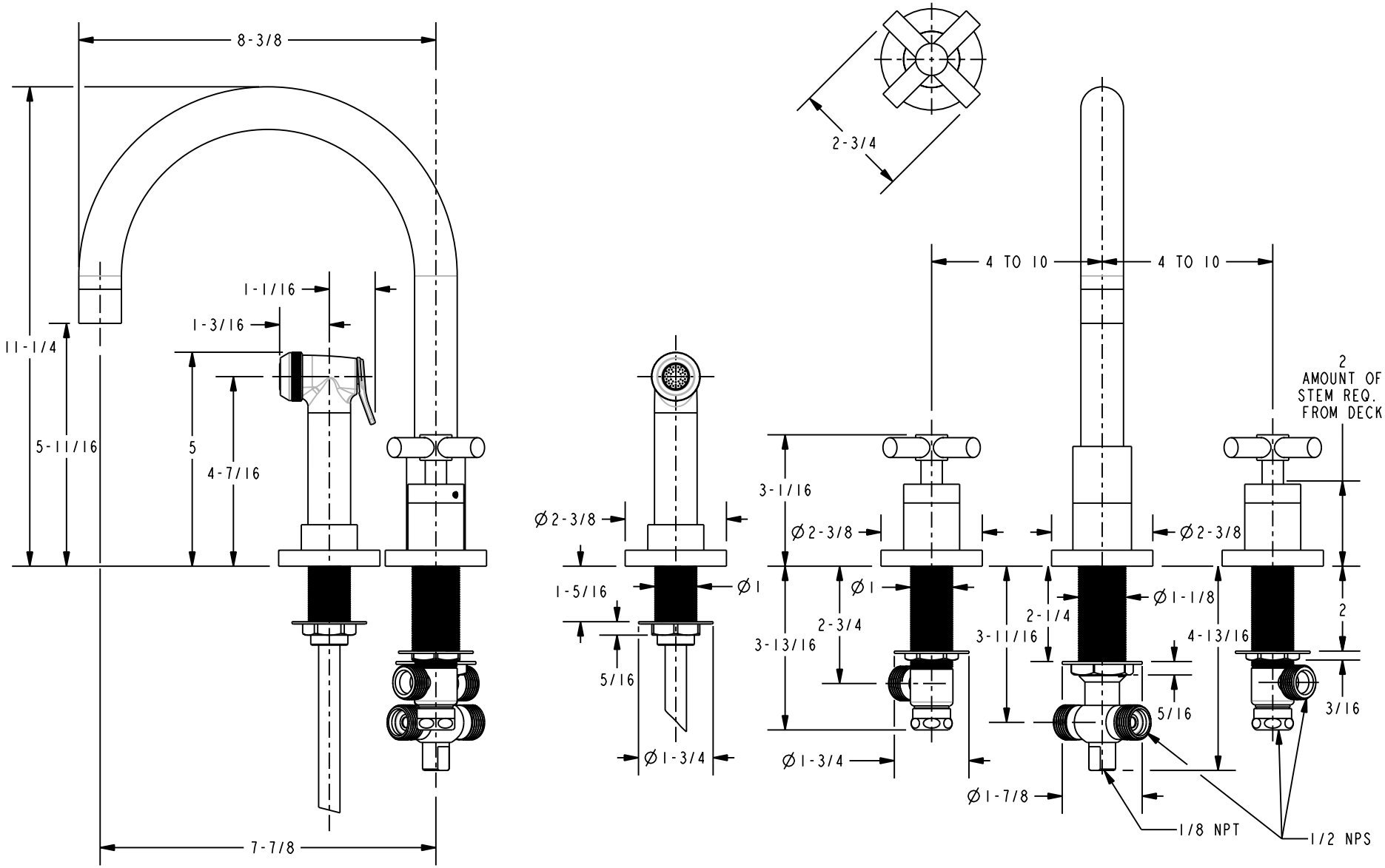

DIMENSIONS ARE IN INCHES AND AN APPROXIMATION OF A TYPICAL INSTALLATION

BRASSTECH INCORPORATED 2001 E. CARNEGIE AVE. SANTA ANA, CA 92705 (949) 417-5207	KITCHEN FCT W/VEG SPRY	ASSY. NO. 9911_SPEC	-	
		SCALE 0.300	REF. -	SHEET 1 OF 1	COPYRIGHT ©