NOTES:

(N1) 1. FIT / FORM / FUNCTION SHALL FOLLOW PS-E.008.

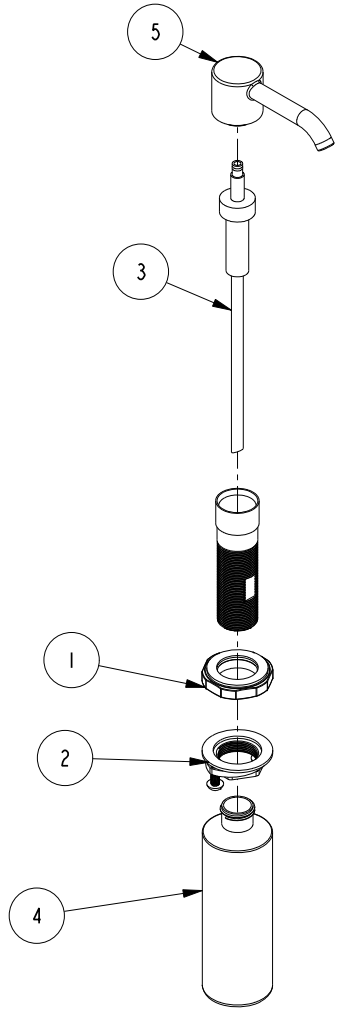

BILL OF MATERIAL (CURRENT LEVEL)

ITEM	PT/ASSY	DESCRIPTION	TYPE	QTY.
1	20-400	ESC- ASM	ASSEMBLY	1
2	20-391	BODY ASM - CONTEMPORARY	ASSEMBLY	1
3	125-8	SOAP DISPENSER PUMP ASM	ASSEMBLY	1
4	125-9	SOAP DISPENSER BOTTLE	PART	1
5	20-373	SOAP PUMP HEAD ASM CONTEMP	ASSEMBLY	1

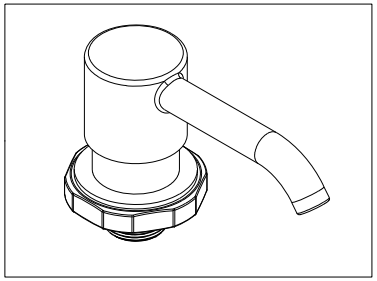

Joe Manga
03/07/2019

ZONE	REV	DESCRIPTION	DATE	APPROVED
-	B	EN-3625b	03/07/19	J.M.
-	A	EN-3558b	02/13/19	V.V.
-	-	EN-3229	06/16/17	J.M

COPYRIGHT 2005 BRASSTECH, INC. THESE DRAWINGS AND THE DESIGNS DEPICTED HEREIN ARE THE PROPRIETARY PROPERTY OF BRASSTECH. ANY USE OR REPRODUCTION IS SUBJECT TO THE EXPRESS APPROVAL OF BRASSTECH. UNAUTHORIZED USE IS STRICTLY PROHIBITED. ALL RIGHTS RESERVED.

TESTING	-	-	-
ASSEMBLY	-	-	-
PLATING	-	-	-
POLISHING	-	NEXT ASSY	USED ON
MACHINING	-	APPLICATION	
TOOLING FIXTURE #		REMOVE ALL BURRS AND SHARP EDGES	

UNITS ARE: INCHES [MM]
TOLERANCES ARE:
FRACTIONS ±1/16" DECIMALS .X ±.1 [2,5] .XX ±.06 [1,5] ANGLES ±1°
(X.XXX) DENOTES CRITICAL DIMS.
ALL THREADS ARE CRITICAL

DRAWN	RAVINDRA	06/16/17
CHECKED	JINSON	06/16/17
APPROVED	J.M	06/16/17

BRASSTECH INCORPORATED
2001 CARNEGIE AVE.
SANTA ANA, CA 92705
(949) 417-5207

SOAP / LOTION DISPENSER

DWG NO. 3190-5721 REV B

SCALE .187 REF. - SHEET 1 OF 2

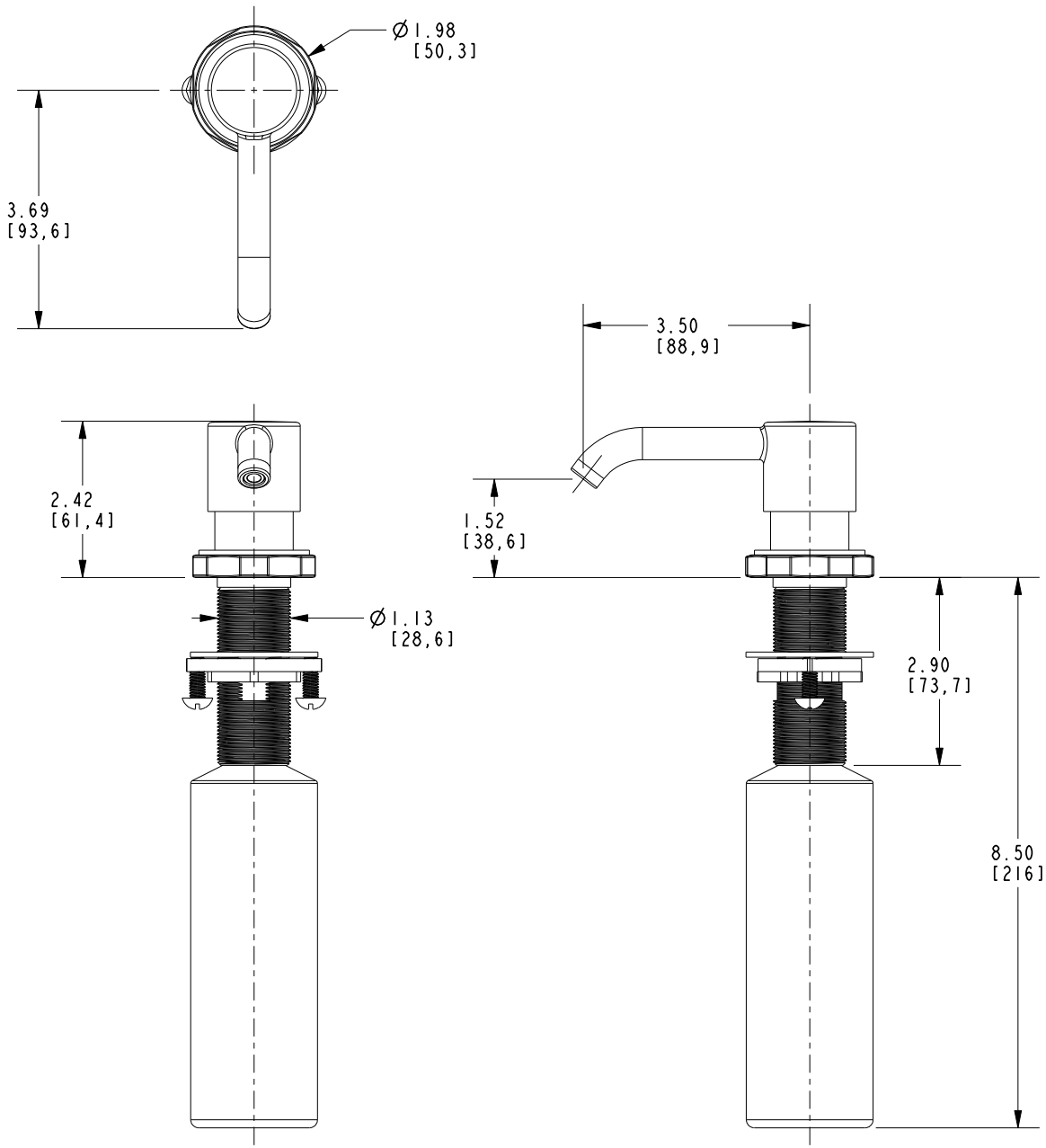

BRASSTECH INCORPORATED

2001 E. CARNEGIE AVE.
SANTA ANA, CA 92705
(949) 417-5207

DWG NO.	REV
3190-5721	B

SCALE	REF.	SHEET
.375	-	2 OF 2