BILL OF MATERIAL (CURRENT LEVEL)

ITEM	PT/ASSY	DESCRIPTION	TYPE	QTY.
1	2-817	SOAP DISPENSER BODY ASM	ASSEMBLY	1
2	125-6	SOAP DISPENSER PUMP HEAD	ASSEMBLY	1
3	125-9	SOAP DISPENSER BOTTLE	PART	1

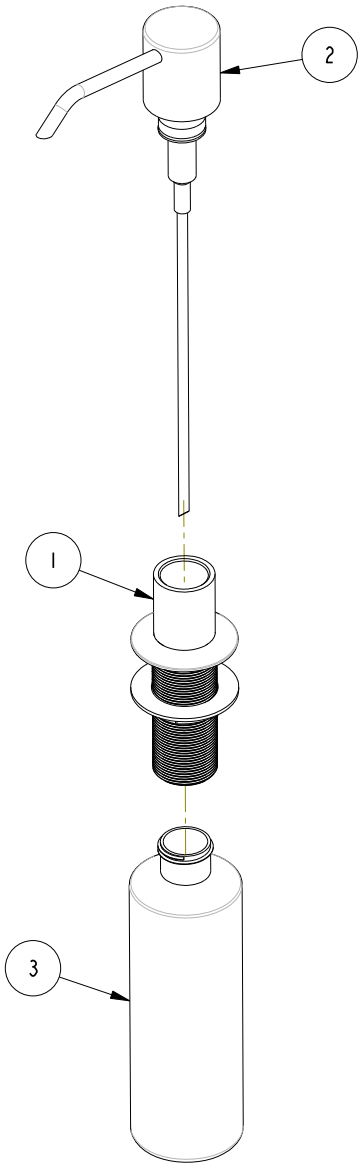

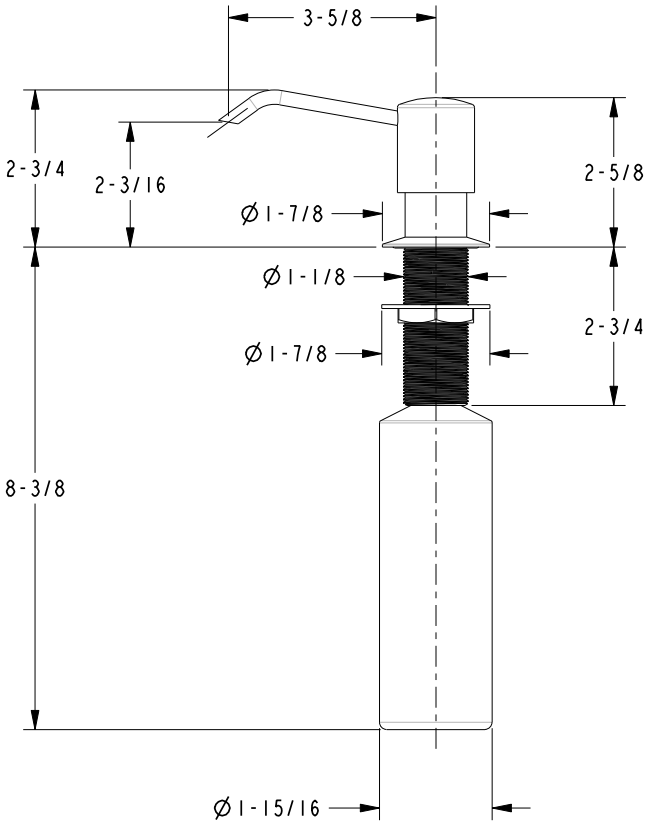

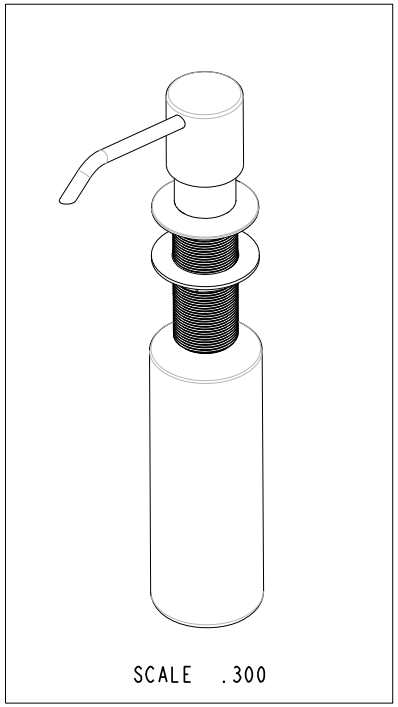

Andy Nguyen

Digitally signed by Andy Nguyen
DN: cn=Andy Nguyen, o=Brasstech, ou, email=anguyen@brasstech.com, c=US
Date: 2012.02.16 10:31:26 -08'00'

COPYRIGHT 2005 BRASSTECH, INC. THESE DRAWINGS AND THE DESIGNS DEPICTED HEREIN ARE THE PROPRIETARY PROPERTY OF BRASSTECH. ANY USE OR REPRODUCTION IS SUBJECT TO THE EXPRESS APPROVAL OF BRASSTECH. UNAUTHORIZED USE IS STRICTLY PROHIBITED. ALL RIGHTS RESERVED.

BRASSTECH INCORPORATED
2001 E. CARNEGIE AVE.
SANTA ANA, CA 92705
(949) 417-5207

SOAP/LOTION DISPENSER

ASSY. NO. 125

SCALE .300 | REF. - | SHEET 1 OF 1

REV	REV DESC	DATE
D	EN-2033	02/15/12
C	EN-1751	05/11/11
B	EN-1201	10/07/09
A	EO-0529	07/06/05
-	RELEASED	PRE '95