NOTES:

(N1) 1. FIT / FORM / FUNCTION SHALL FOLLOW PS-E.008.

BILL OF MATERIAL (CURRENT LEVEL)

ITEM	PT/ASSY	DESCRIPTION	TYPE	QTY.
1	3-234	WALL TUB SPOUT ASM	ASSEMBLY	1
2	3-573	HANDLE AND ESCUTCHEON ASSEMBLY	ASSEMBLY	2

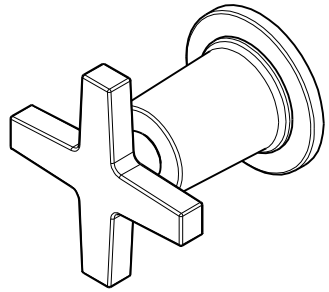

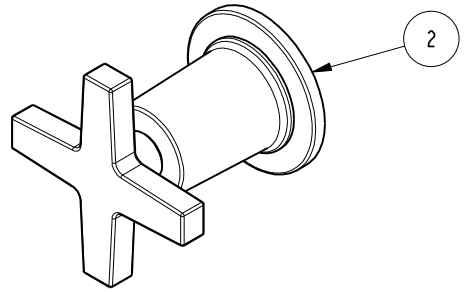

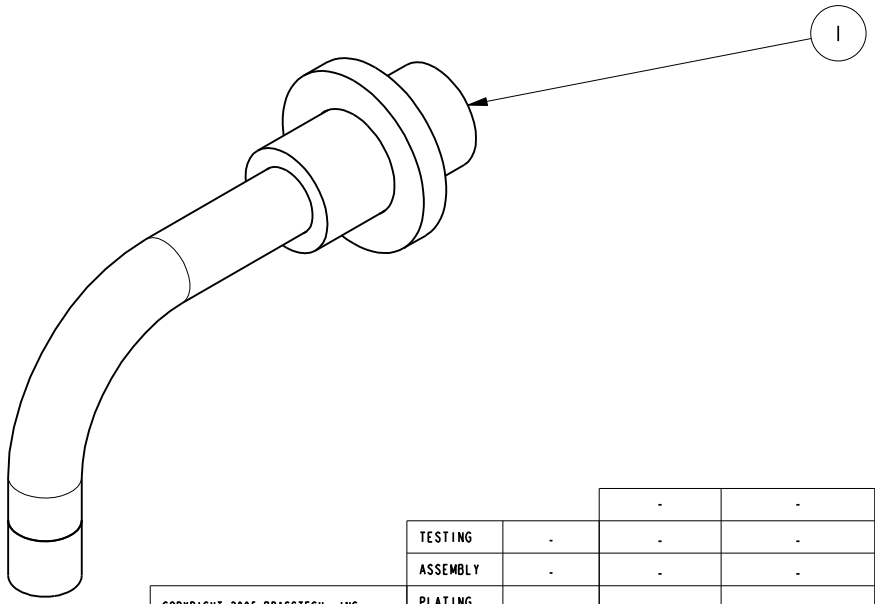

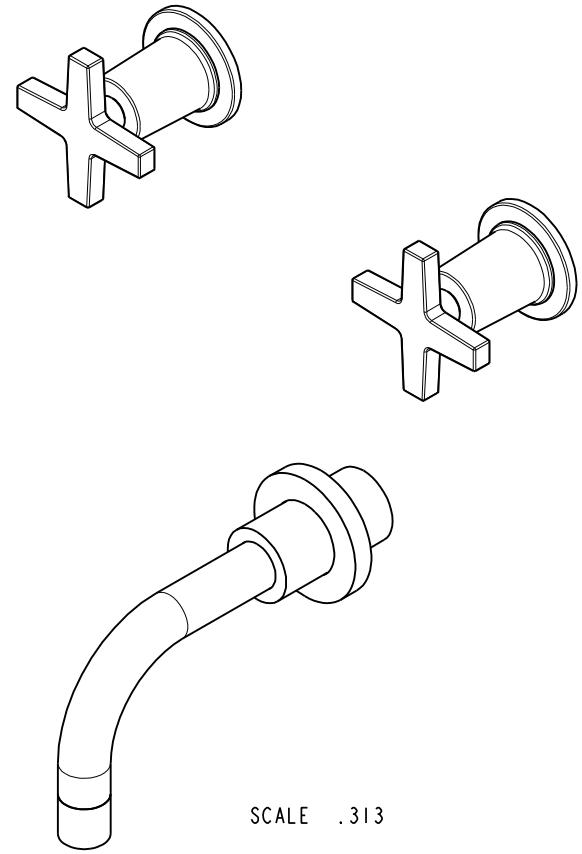

ZONE	REV	DESCRIPTION	DATE	APPROVED
-	-	EN-3041	07/27/16	-

COPYRIGHT 2005 BRASSTECH, INC. THESE DRAWINGS AND THE DESIGNS DEPICTED HEREIN ARE THE PROPRIETARY PROPERTY OF BRASSTECH. ANY USE OR REPRODUCTION IS SUBJECT TO THE EXPRESS APPROVAL OF BRASSTECH. UNAUTHORIZED USE IS STRICTLY PROHIBITED. ALL RIGHTS RESERVED.

TESTING	-	-	-
ASSEMBLY	-	-	-
PLATING	-	-	-
POLISHING	-	NEXT ASSY	USED ON
MACHINING	-	APPLICATION	
TOOLING FIXTURE #		REMOVE ALL BURRS AND SHARP EDGES	

UNITS ARE: INCHES [MM]
TOLERANCES ARE:
FRACTIONS ±1/16" DECIMALS .X ±.1 [2,5] .XX ±.06 [1,5] ANGLES ±1°
(X.XXX) DENOTES CRITICAL DIMS.
ALL THREADS ARE CRITICAL

DRAWN	JINSON	07/27/16
CHECKED	RAVINDRA	07/27/16
APPROVED	J.M	07/27/16

BRASSTECH INCORPORATED
2001 CARNEGIE AVE.
SANTA ANA, CA 92705
(949) 417-5207

Joe Manga
Digitally signed by Joe Manga
DN: cn=Joe Manga, o=, ou=Brasstech Inc., email=jmanga@brasstech.com, c=US
Date: 2016.09.28 15:52:29 -07'00'

WALL MOUNT TUB FAUCET

DWG NO. 3-2985 REV -

SCALE .438 REF. - SHEET 1 OF 3

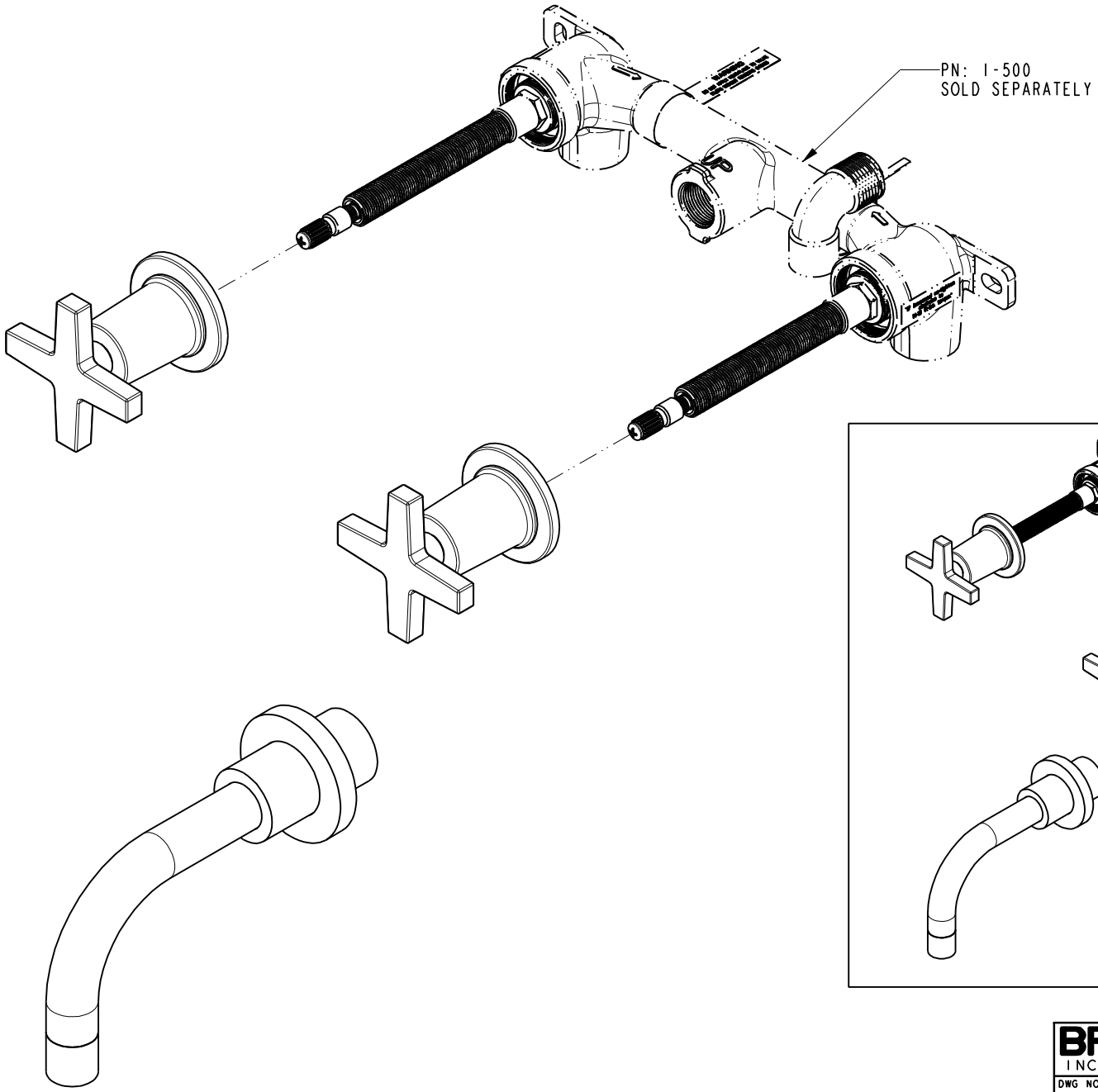

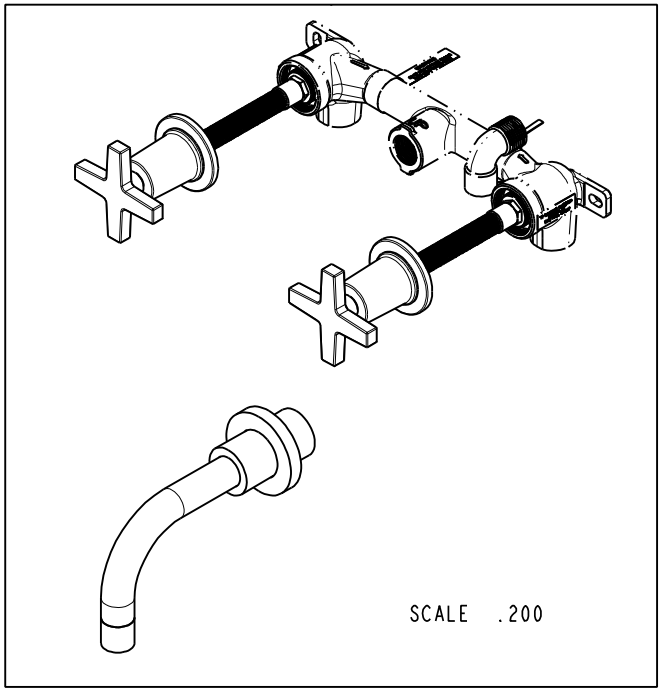

BRASSTECH INCORPORATED
2001 E. CARNEGIE AVE.
SANTA ANA, CA 92705
(949) 417-5207

DWG NO.	REV
3-2985	-

SCALE	REF.	SHEET
.375	-	2 OF 3

NOTES:

1. CUT STEM TO DIMENSION SHOWN.
2. CUT ALL THREAD 0.75" SHORTER THAN STEM.

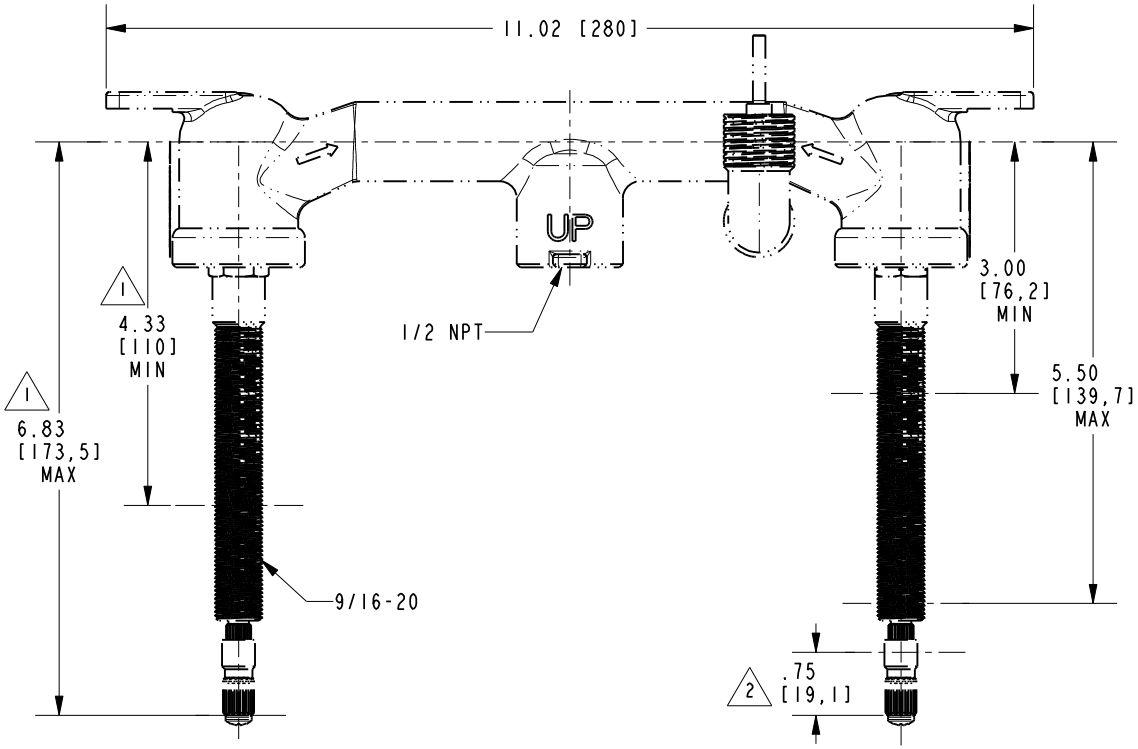

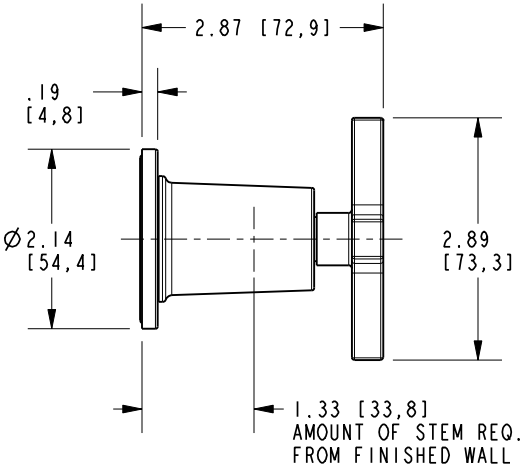

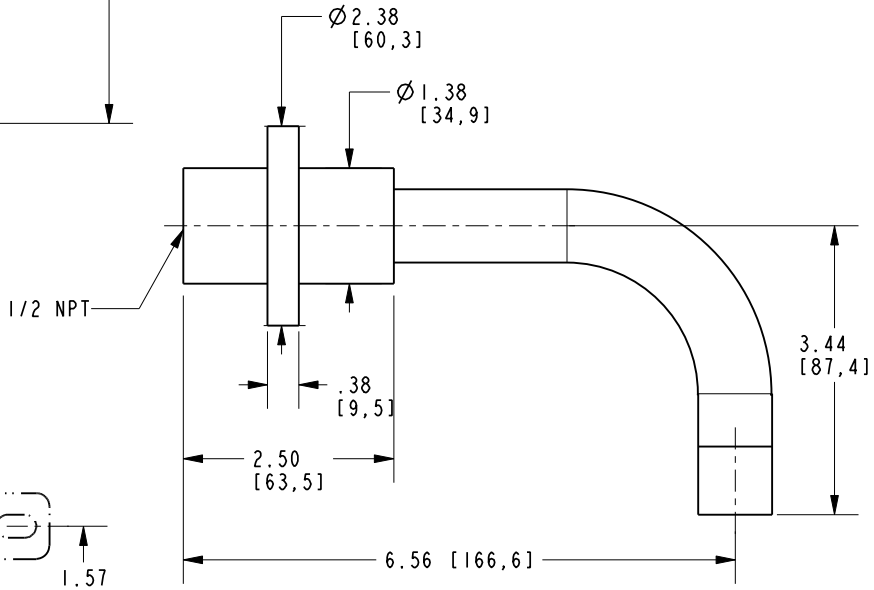

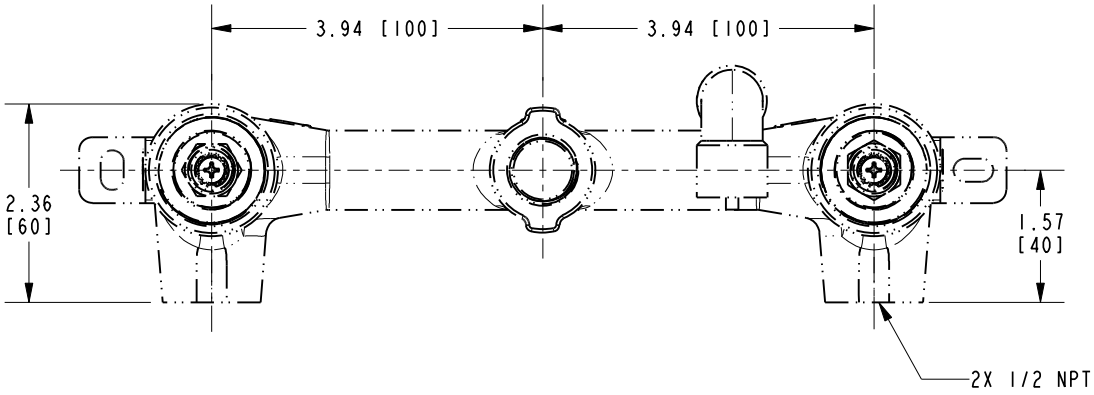

BRASSTECH INCORPORATED	2001 E. CARNEGIE AVE. SANTA ANA, CA 92705 (949) 417-5207		
DWG NO. 3-2985			REV -
SCALE .438	REF. -	SHEET 3 OF 3	