NOTES:

1. FIT / FORM / FUNCTION SHALL FOLLOW PS-E.008.

BILL OF MATERIAL (CURRENT LEVEL)

ITEM	PT/ASSY	DESCRIPTION	TYPE	QTY.
1	40795	24" BACKPLATE	PART	1
2	7-757	24" TOWEL BAR BRAZED ASM.	ASSEMBLY	1
3	92031	SCRW, M6 X 1 X 6 SKT HD CUP PT W/ SELF LOC SS	PART	2
4	28XXG	MOUNTING BRACKET	PART	2
5	1-206	HARDWARE PACK	ASSEMBLY	2
6	10615	HEX KEY, 3MM ALLOY STEEL	PART	1

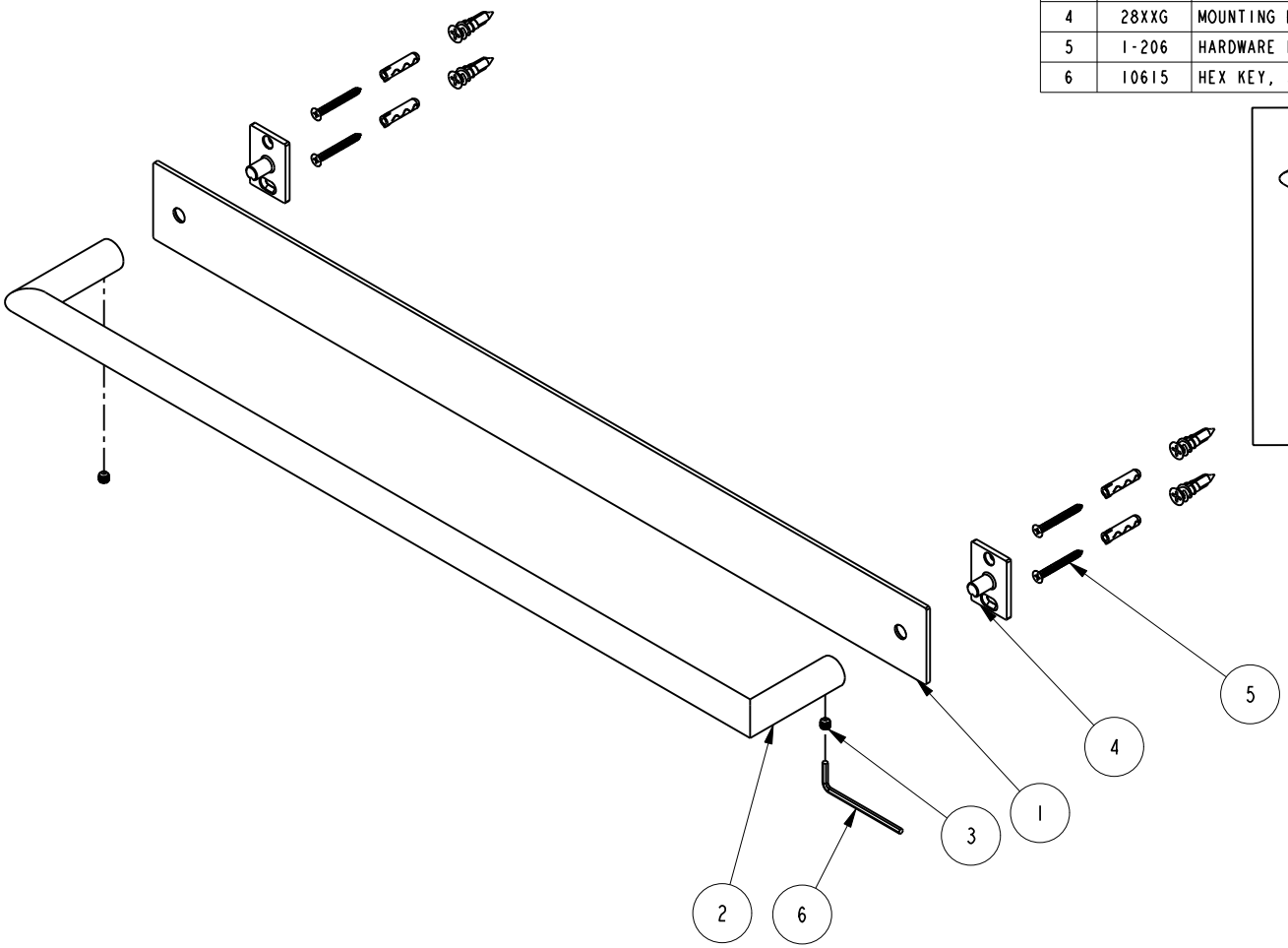

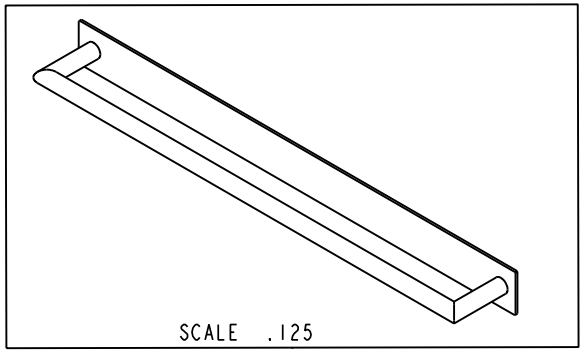

George Bazan

Digitally signed by George Bazan
Date: 2020.01.29 08:06:55 -08'00'

ZONE	REV	DESCRIPTION	DATE	APPROVED
-	B	EN-4069	01/23/20	J.M.
-	A	EN-4022	11/11/19	J.M.
-	-	EN-3912	08/02/19	J.M.

COPYRIGHT 2005 BRASSTECH, INC. THESE DRAWINGS AND THE DESIGNS DEPICTED HEREIN ARE THE PROPRIETARY PROPERTY OF BRASSTECH. ANY USE OR REPRODUCTION IS SUBJECT TO THE EXPRESS APPROVAL OF BRASSTECH. UNAUTHORIZED USE IS STRICTLY PROHIBITED. ALL RIGHTS RESERVED.

TESTING	-	-	-
ASSEMBLY	-	-	-
PLATING	-	-	-
POLISHING	-	NEXT ASSY	USED ON
MACHINING	-	APPLICATION	
TOOLING FIXTURE #		REMOVE ALL BURRS AND SHARP EDGES	

UNITS ARE: INCHES [MM]
TOLERANCES ARE:

FRACTIONS	DECIMALS	ANGLES
±1/16"	.X ±.1 [2,5]	±1°
	.XX ±.06 [1,5]	

(X.XXX) DENOTES CRITICAL DIMS.
ALL THREADS ARE CRITICAL

DRAWN	G.B.	08/02/19
CHECKED	J.M.	08/02/19
APPROVED	J.M.	08/02/19

BRASSTECH INCORPORATED

2001 CARNEGIE AVE.
SANTA ANA, CA 92705
(949) 417-5207

24" TOWEL BAR

DWG NO. 2540-1250 REV B

SCALE .225 REF. - SHEET 1 OF 2

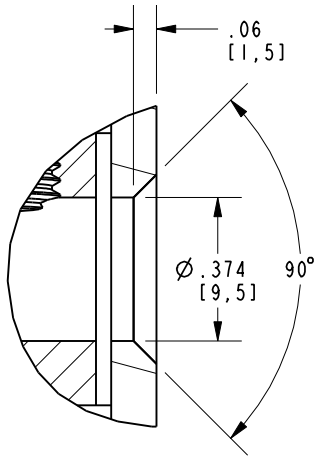

DETAIL A
SCALE 2.000

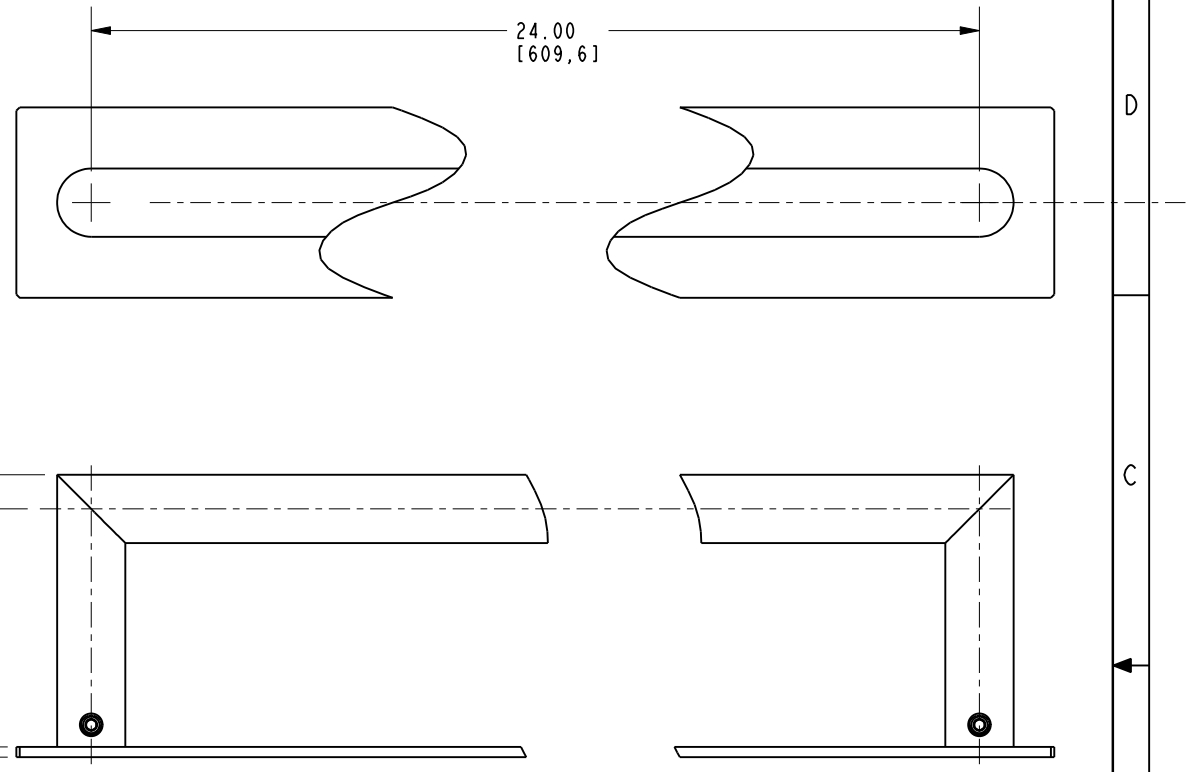

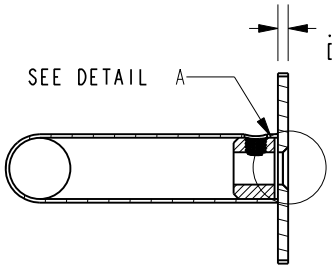

SECTION A-A

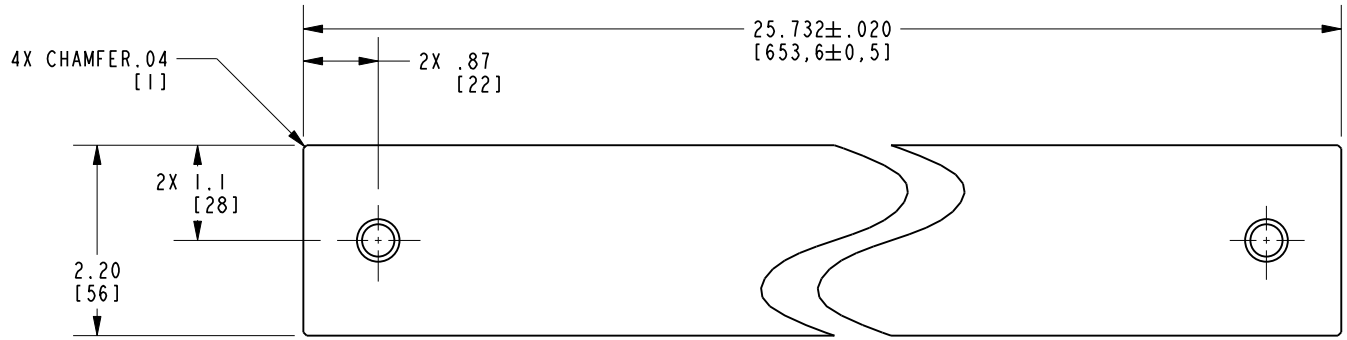

BRASSTECH INCORPORATED
2001 E. CARNEGIE AVE.
SANTA ANA, CA 92705
(949) 417-5207

DWG NO.	REV
2540-1250	B

SCALE .450	REF. -	SHEET 2 OF 2