MOEN

Buy it for looks. Buy it for life.®

Specifications

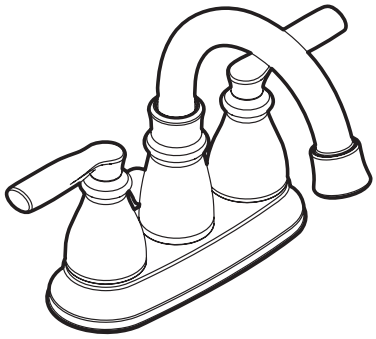

HILLIARD®

Two-Handle 4" Centerset Lavatory Faucet

Models: 84537 series includes pop-up waste

WaterSense Meets EPA Criteria
Certified by IAPMO R&T

DESCRIPTION
- Metal construction with finish identified by suffix
- 1/2" IPS connections for flexible hoses only; not for use with rigid or semi-rigid supply risers (3/8" Copper or Pex) with coupling nuts
- Installation through 3 holes, 1" min. diameter, and 4" on center
- Includes pop-up type waste assembly

OPERATION
- Lever handles
- Maximum handle rotation angle is 90° to full on
- Hot side counterclockwise to open (clockwise to close)
- Cold side clockwise to open (counterclockwise to close)
- Rotating spout

FLOW
- Water usage is limited to these maximum flow rates as indicated by the corresponding product markings
  ° 1.2 gpm max (4.5L/min) at 60 psi

CARTRIDGE
- 1224 cartridge
- Nonmetallic and stainless steel material

STANDARDS
- Third party certified to WaterSense®, ASME A112.18.1/CSA B125.1 and all applicable requirements referenced therein including NSF 61/9 & 372
- Products marked with 1.2 gpm are compliant with California water efficiency regulations
- Complies with California Proposition 65 and with the Federal Safe Drinking Water Act
- **ADA** for lever handles

WARRANTY
- Lifetime limited warranty against leaks, drips and finish defects to the original homeowner
- 10 year limited warranty when used in a multifamily installation
- 5 year limited warranty when used in a commercial installation

Visit www.moen.com/support for complete details and limitations

OPTIONS *(See Illustrated Parts page)*
- Thin and thick deck mounting hardware kits available

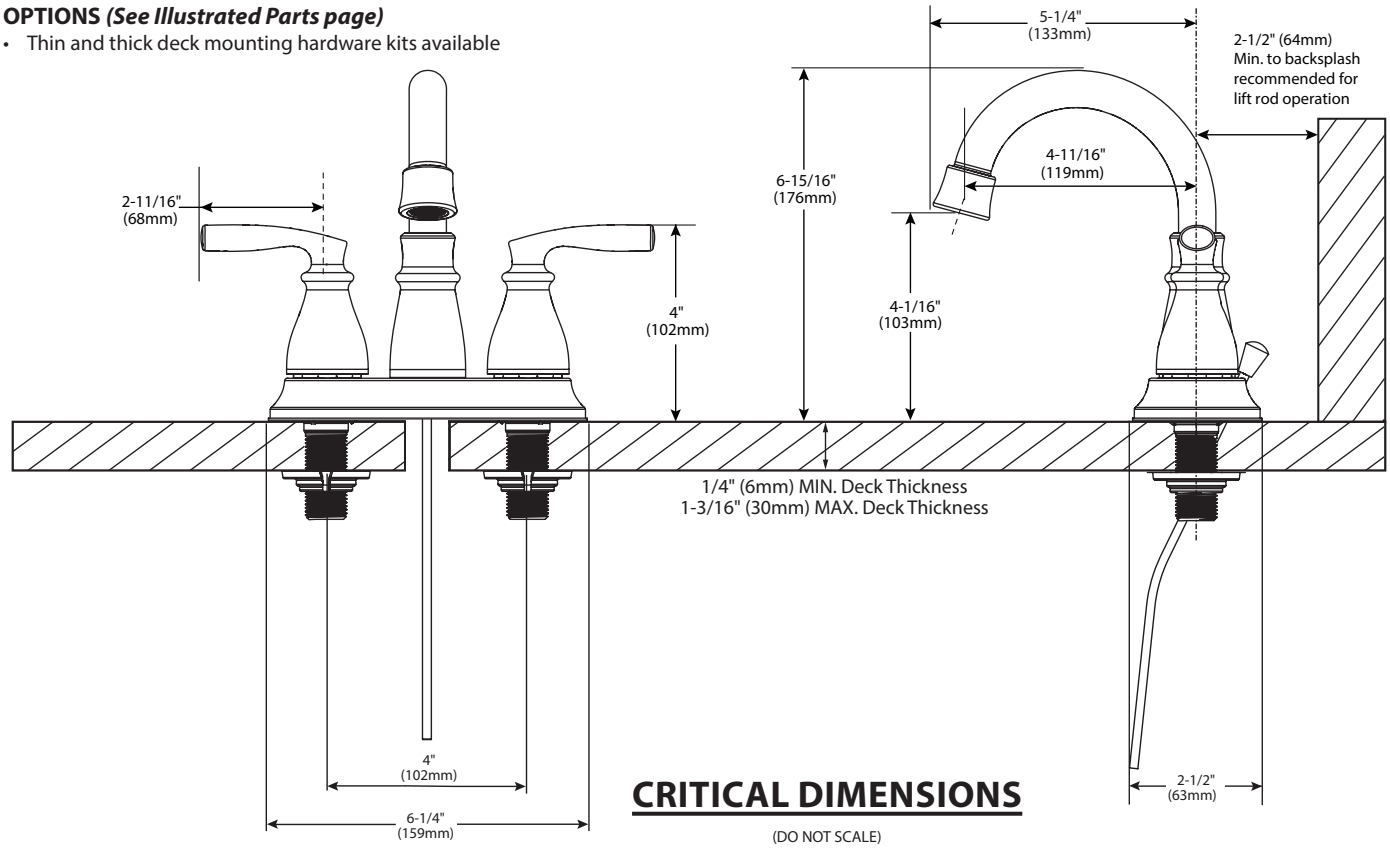

CRITICAL DIMENSIONS

(DO NOT SCALE)

FOR MORE INFORMATION CALL: 1-800-BUY-MOEN
www.moen.com

07/24/2017 SPC 93219 S000025117
Release 00