MOEN®

Specifications

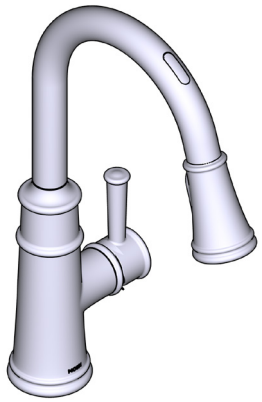

U BY MOEN
SMART FAUCET™

Belfield™

Single-Handle High Arc Pulldown KitchenFaucet

MODELS: 7260EV Series

NOTE: THIS FAUCET IS DESIGNED TO BE INSTALLED THROUGH 1 HOLE, 1-1/2" (38mm) MIN. DIA.

ADA

WORKS WITH amazon alexa

works with the Google Assistant

DESCRIPTION

- Metal Wand
- Versatile, hands-free convenience in the kitchen
- PowerBoost™ technology provides booste water performance with a push of a button
- Allows users to control the faucet in 4 unique ways: Handle, Sensor, Voice and Mobile App
- Powered by 6 D alkaline batteries or optional AC adapter with power splitter (sold separately)
- Reflex™ pulldown system offers smooth operation, easy movement and secure docking
- Metal construction with various finishes identified by suffix
- Duralock™ quick connect
- Pulldown spray with 68" braided hose
- Control box flexible supply lines with 3/8" compression fittings
- High arc spout provides height and reach to fill or clean large pots while pull down wand provides the maneuverability for cleaning or rinsing

OPERATION

- Lever style handle
- Thermostatic temperature controlled by handle sensor, voice or Mobile app
- Operates with less than 5 lbs. of force
- Operates in stream or spray mode in the pulldown or retracted position
- Spout rotates 100 degrees
- WiFi enabled smart phone connectivity
- Smart phone app available for iOS and Android

FLOW

- Flow is limited to 1.5 gpm (5.7 L/min) at 60 psi

CARTRIDGE

- 1255™ Duralast™ cartridge

STANDARDS

- Third party certified to, ASME A112.18.1/CSA B125.1 and all applicable requirements referenced therein including NSF 61/9 & 372
- Third party certified to meet FCC part 15 Class B
- Meets CalGreen and Georgia SB370 requirements
- Complies with California Proposition 65 and with the Federal Safe Drinking Water Act
- The backflow protection system in the device consists of two independently operating check valves, a primary and a secondary which prevent backflow
- ADA for lever handle

WARRANTY

- Limited lifetime warranty against leaks, drips, finish defects to the original consumer purchaser
- 5 year warranty electronic operation defects to the original consumer purchaser
- 5 year warranty against leaks, drips, finish defects if used in commercial installations
- 1 year warranty against electronic operation defects if used in commercial installations

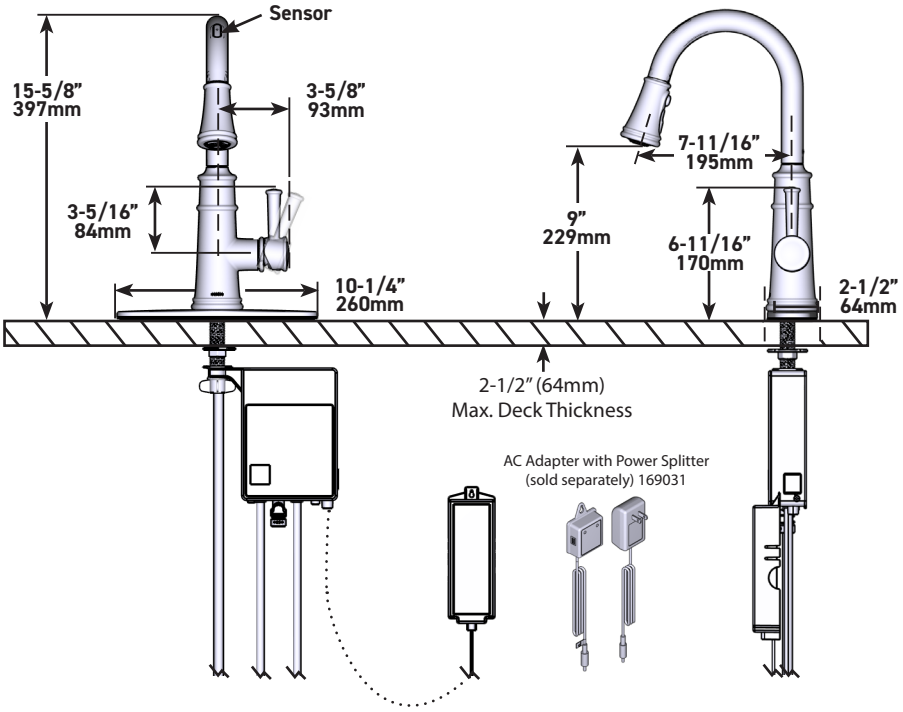

CRITICAL DIMENSIONS DO NOT SCALE

Close up view of Control Box

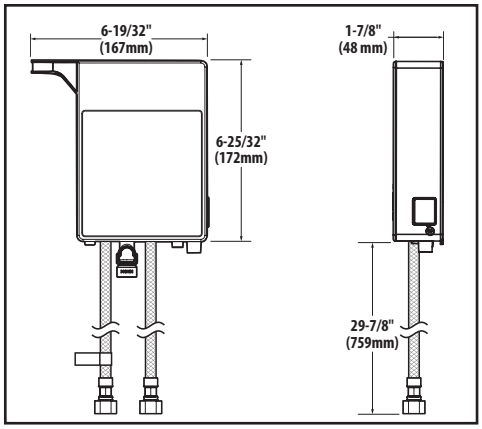

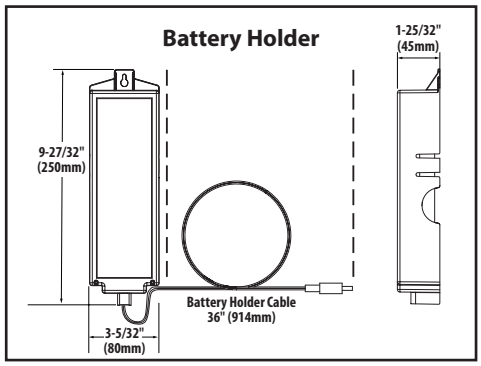

01/26/2021 SPC9486 500000455024
Released 01