AXOR

hansgrohe

Brand	hansgrohe
Art. Name	**Vivenis** Widespread Faucet 90 with Pop-Up Drain, 1.2 GPM
Art. Nr.	75033001
Surface	chrome
Pos.	1

reddot winner 2021

Product Picture

Features

- Consists of: Widespread faucet, Pop-up assembly
- Spray modes: WaterfallStream
- Flow: 1.2 GPM (4.5 L/Min)
- 90° ceramic valves
- Includes pop-up drain
- Material waste set: Metal

Drawing

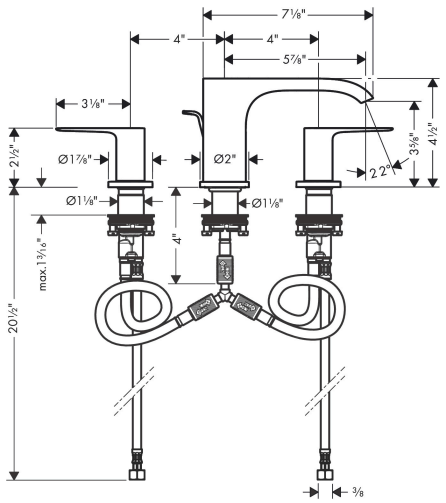

Technology

Comfort Zone

Eco Right

AirPower