Repair Parts

E80-A11E-46ABCPT

Advanced electronic commercial faucet with touchless sensor operation

CHICAGO FAUCETS
Geberit Group

E-Tronic 80 Dual Supply Base with Internal Mixer and User Temp Control

Base Parts:

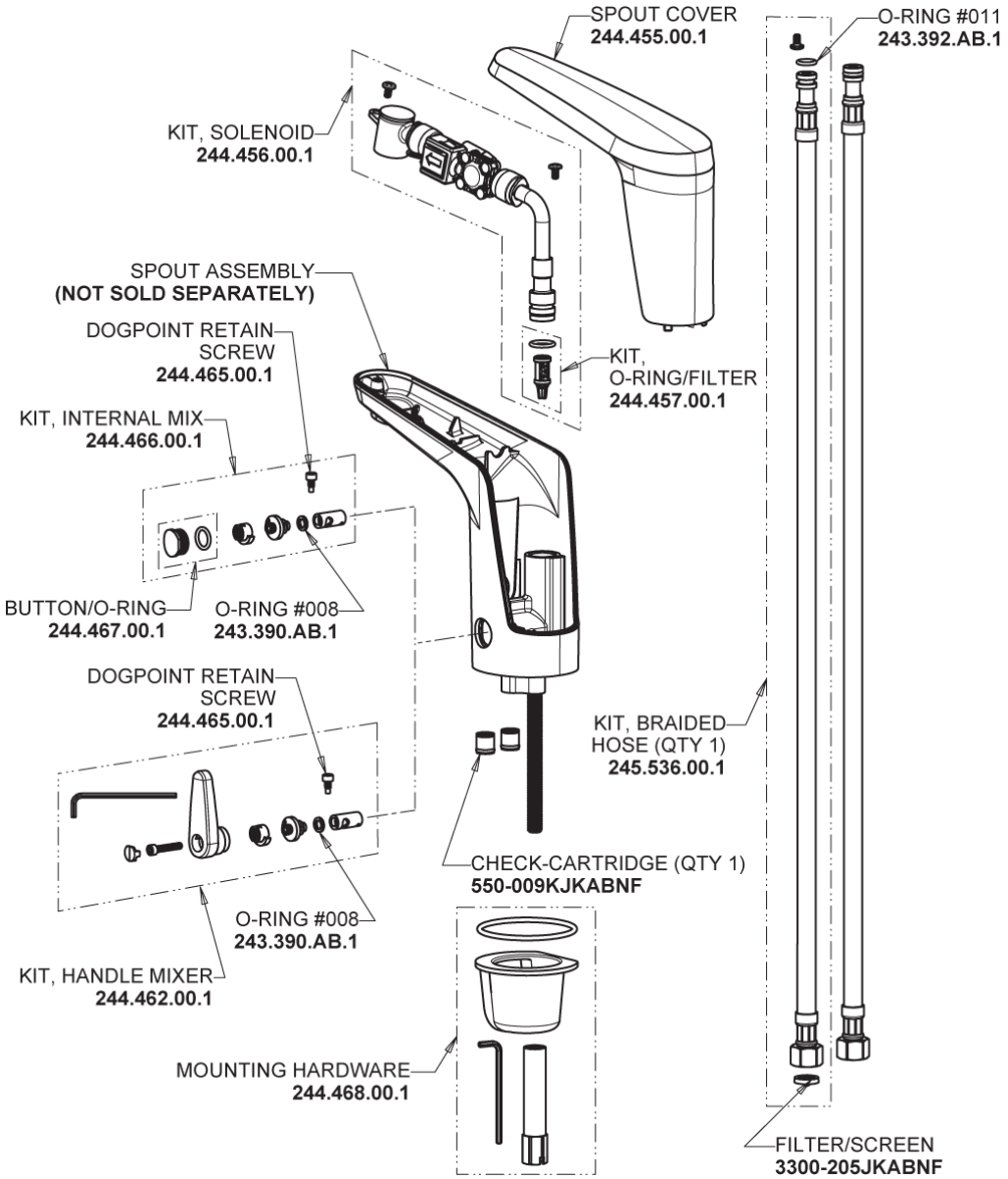

1.0 GPM (3.8 L/min) Pressure Compensating Laminar Flow Outlet
244.170.00.1

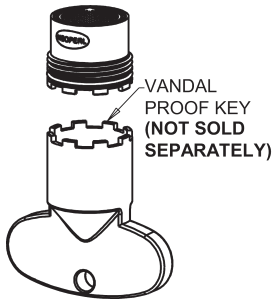

Electronic Module
244.458.00.1T

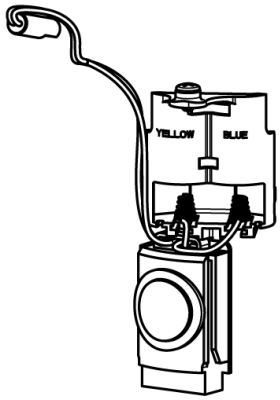

AC Power Adapter
240.747.00.1

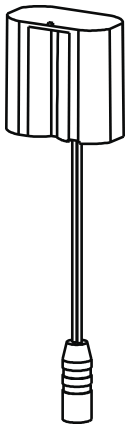

For Technical Assistance:

Phone: 800-TEC-TRUE (832-8783)

Email: techsupport.us@chicagofaucets.com

2100 South Clearwater Drive
Des Plaines, IL 60018
Phone: 847-803-5000
chicagofaucets.com