# CADET® 3 ELONGATED TOILET
**VITREOUS CHINA**

## CADET® 3 ELONGATED TOILET

❑ **270CA.001**
- Features the **Cadet® Flushing System**
- Vitreous china
- Low consumption (6.0 Lpf/1.6 gpf) toilet
- PowerWash® rim scrubs bowl with each flush
- Includes color match bowl caps
- EverClean® surface included
- 3" flush valve
- 2-1/8" trapway
- 12" (305mm) rough-in
- Generous 9" x 8" water surface area
- Chrome finish trip lever is supplied
- 1,000g MaP Score** at 1.6 gpf
- 5 year warranty

❑ **3717C.001** Elongated Bowl
❑ **4021.001N** Tank

**Nominal Dimensions:**
768 x 441 x 733mm (30-1/4" x 17-3/8" x 28-7/8")

Fixture only, seat and supply sold separately

**Compliance Certifications -**
**Meets or Exceeds the Following Specifications:**
- ASME A112.19.2-2008/CSA B45.1-08 for Vitreous China Fixtures

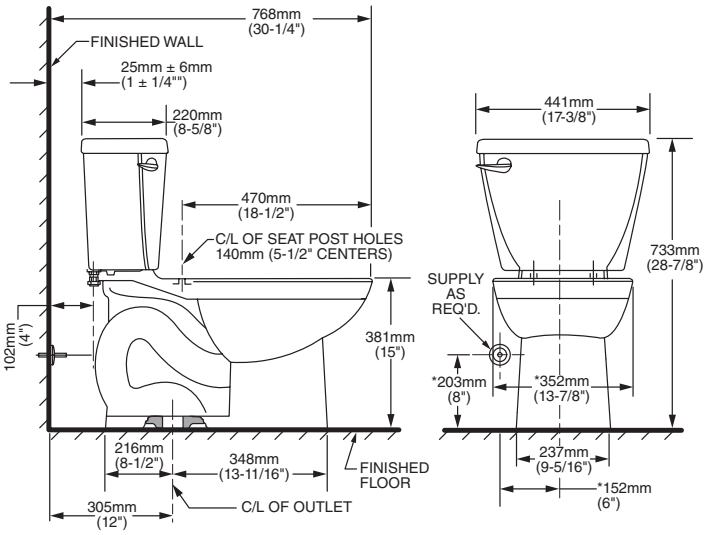


**NOTES:**
THIS TOILET IS DESIGNED TO ROUGH-IN AT A MINIMUM DIMENSION OF 305MM (12") FROM FINISHED WALL TO C/L OF OUTLET.
SUPPLY NOT INCLUDED WITH FIXTURE AND MUST BE ORDERED SEPARATELY.
* DIMENSION SHOWN FOR LOCATION OF SUPPLY IS SUGGESTED.

**IMPORTANT:** Dimensions of fixtures are nominal and may vary within the range of tolerances established by ANSI Standard A112.19.2.
These measurements are subject to change or cancellation. No responsibility is assumed for use of superseded or voided pages.

** Maximum Performance (MaP) testing performed by IAPMO R&T Lab. MaP Report conducted by Veritec Consulting, Inc. and Koeller and Company.

**To Be Specified:**
❑ Color: ❑ White ❑ Bone ❑ Linen ❑ Black
❑ Seat: #5321.110 EverClean® Elongated Seat with Slow Close Snap-Off Hinges
❑ Supply with stop:

CADET® 3 Flushing System


© 2013 AS America Inc.