American Standard

MODEL 3052.X0X.RS
WALK IN BATH TUB
HIGH GLOSS SOLID SURFACE

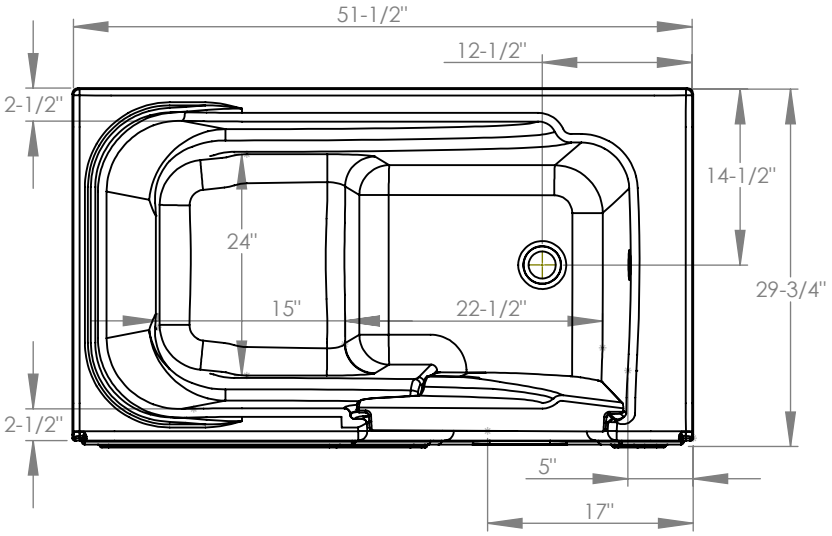

NOTES:
TUB IS SUPPORTED BY THE FRAME AND FIVE INTEGRATED ADJUSTABLE FEET, NO ADDITIONAL SUPPORT IS REQUIRED.

REFER TO INSTALLATION INSTRUCTIONS SUPPLIED WITH TUB FOR ADDITIONAL INFORMATION.

FITTINGS NOT INCLUDED AND MUST BE ORDERED SEPARATELY

PROVIDE SUITABLE REINFORCEMENT TO SUB FLOOR FOR ALL SUPPORTS

IMPORTANT
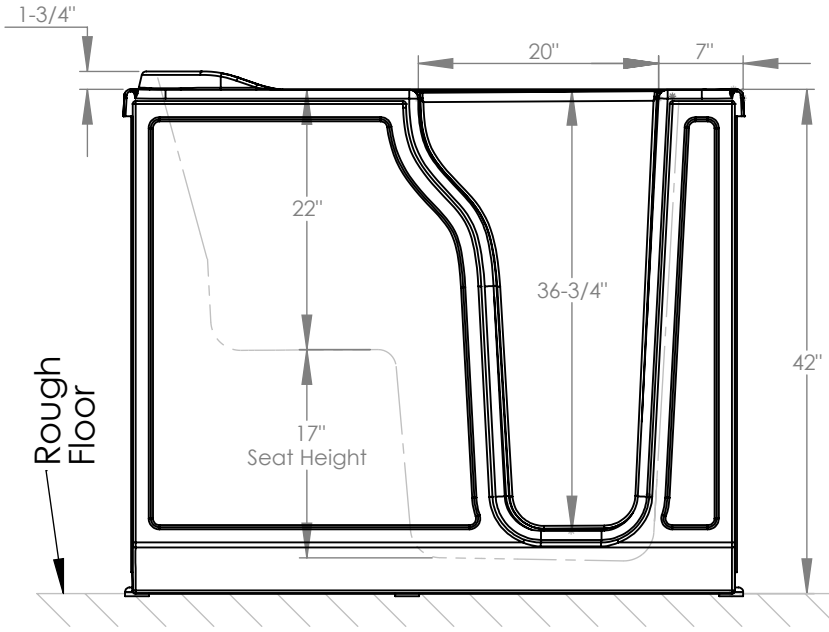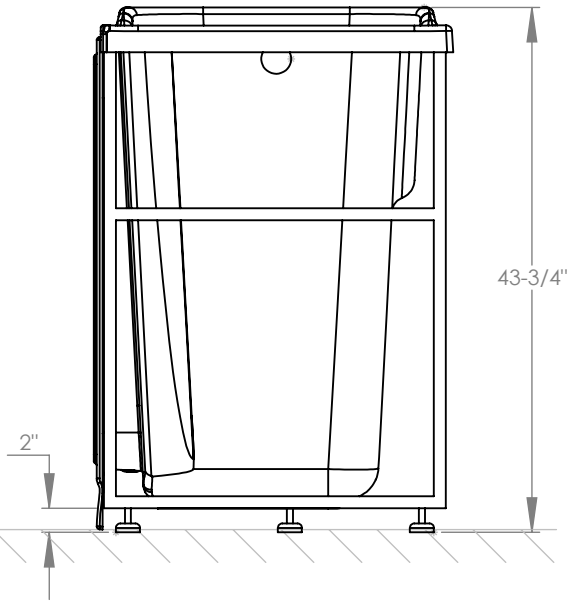
Dimensions of fixtures are nominal, may vary and are subject to change or cancellation. No responsibility is assumed for use of superseded or vaided leaflet.