PF1812U

Undercounter Lavatory Vitreous China

Product Features

- Vitreous china with front overflow
- Rectangle undercounter lavatory
- Mounting clips included
- Internal basin depth: 6-5/16"
- Basin depth to overflow: 5-1/4"
- Meets ASME standard: A112.19.2M
- cUPC/IAPMO listed
- Can be mounted for ADA installation
- Available in white or biscuit

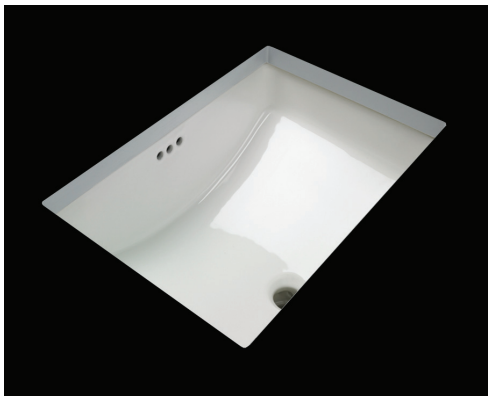

PF1812UWH

Dimensions

- Interior: 18-3/4" x 12-1/4"
- Exterior: 21" x 14-1/2"

Model Numbers

PF1812UWH: 18" x 12"
vc undercounter lavatory - white
PF1812UBS: 18" x 12"
vc undercounter lavatory - biscuit

Product Specifications

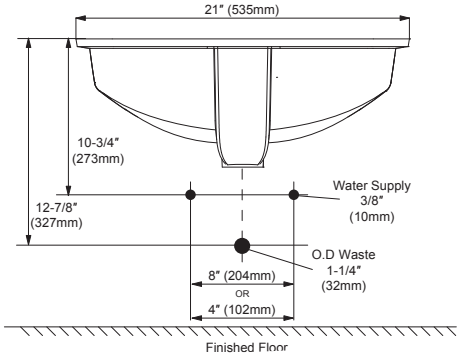

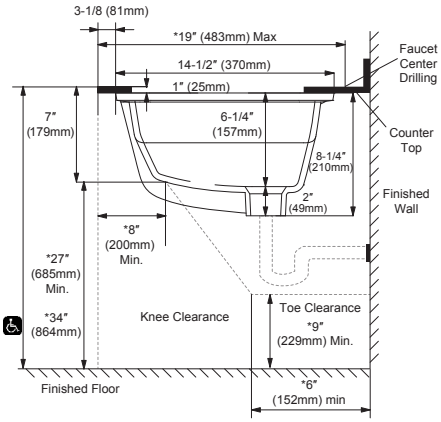

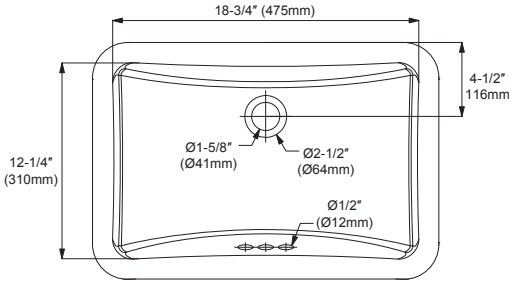

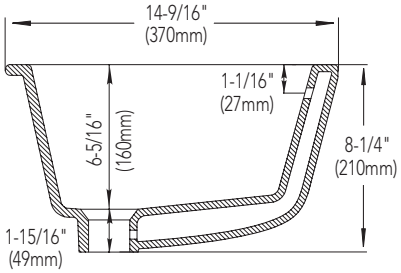

Warranty and Codes

These products come complete with installation, operating, care and maintenance instructions. All PROFLO fixtures carry a 1- year limited warranty. These products meet or exceed ASME/ANSI A112.19.2M. In an effort to continually improve our products, we will make design changes from time to time. We reserve the right to ship newly designed product to fill any order unless we agree in writing to do otherwise.

Distributed Exclusively by Ferguson and Wolseley Canada

© 2016 Ferguson Enterprises, Inc.

0816 253034